ViewZ®
www.viewzusa.com

VZ-CMKiT-01

VESA CEILING MOUNT KIT

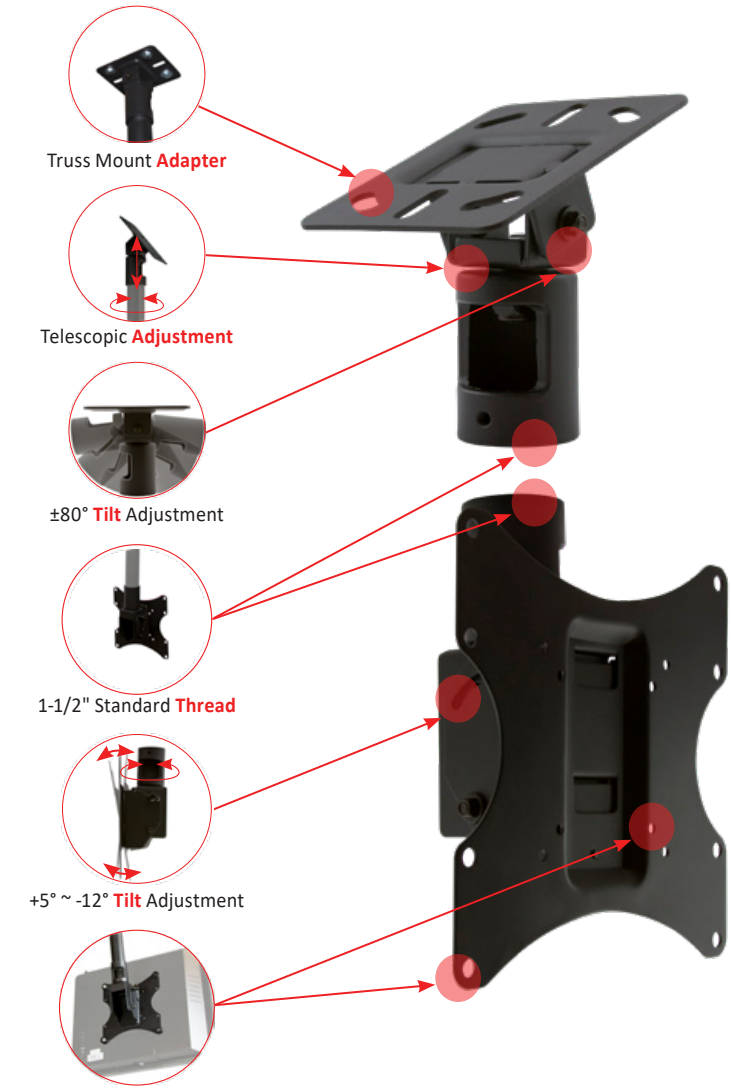

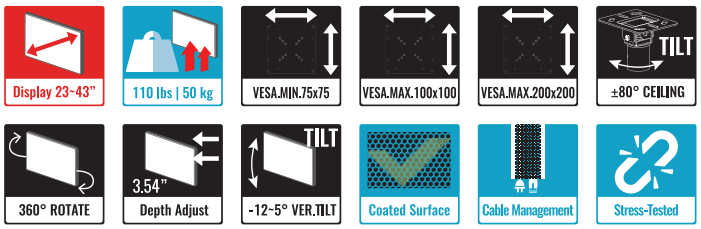

MODEL #	VZ-CMKiT-01
FEATURES	
Net Weight	6.21 lbs / 2.82 kg
Weight Capacity	110 lbs / 50 kg
Display Range	23" ~ 43"
VZ-CM-V1 Plate Size (W x H x D)	220 x 252 x 90mm / 8.66" x 9.92" x 3.54"
VZ-CM-V1 Pole (R x Length)	Ø 38.1 x 76mm / Ø 1.5 x 3"
VZ-CM-T Plate Size (W x H x D)	150 x 120 x 53mm / 5.9" x 4.72" x 2.08"
VZ-CM-T Pole (R x Length)	Ø 38.1 x 76mm / Ø 1.5 x 3"
PAN Rotation	360 °
Tilt Capability (VZ-CM-V1 / VZ-CM-T)	+5° ~ - 12° / ± 80 °
Mounting Patterns Type	VESA
Mounting Patterns	75x75, 100x100, 200x100, 200x200

VZ-CMKiT-01 ADVANTAGES

- Mounting Head for 23" to 43" CCTV & Video Wall Monitors
- Load Capacity is 110 lbs / 50 kg
- 5° Tilt Up and 12° Tilt Down Adjustment along with 360° Pan Rotation For Achieving that Perfect Viewing Angle
- VESA Standard - 75x75, 100x100, 200x100 and 200x200
- Easy Cable Management
- Connects to Standard Pole sizes - 1-1/2"
- Pole Option : VZ-CM-P36 (35.5") and VZ-CM-P15 (8.7" ~ 14.55")

Designed specifically for

VZ-24/27/32/43CMP	VZ-PVM-I2W3-N	VZ-PVM-I2B3-N
VZ-PVM-I3W3-N	VZ-PVM-I3B3-N	VZ-PVM-I4W3-N
VZ-PVM-I4B3-N	VZ-PVM-P4B3/P4W3	VZ-PVM-P5B3/P5W3
VZ-32IPM	VZ-43UHD	

FEATURES

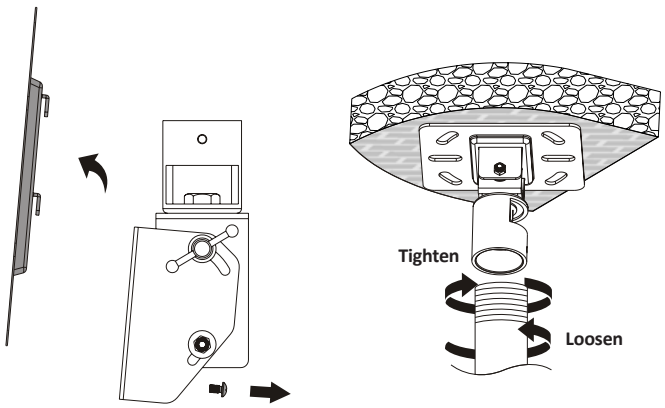

Contact ViewZ

- Address : 177 W. Orangethorpe Ave., Placentia, CA 92870
- Phone : (714) 996-1177, Fax : (714) 996-1138
- Sales : sales@viewzusa.com

* Design and specifications are subject to change without notice.

* 05112022-Rev. A

ViewZ®
www.viewzusa.com

VZ-CMKiT-01

VESA CEILING MOUNT KIT

DIMENSIONS

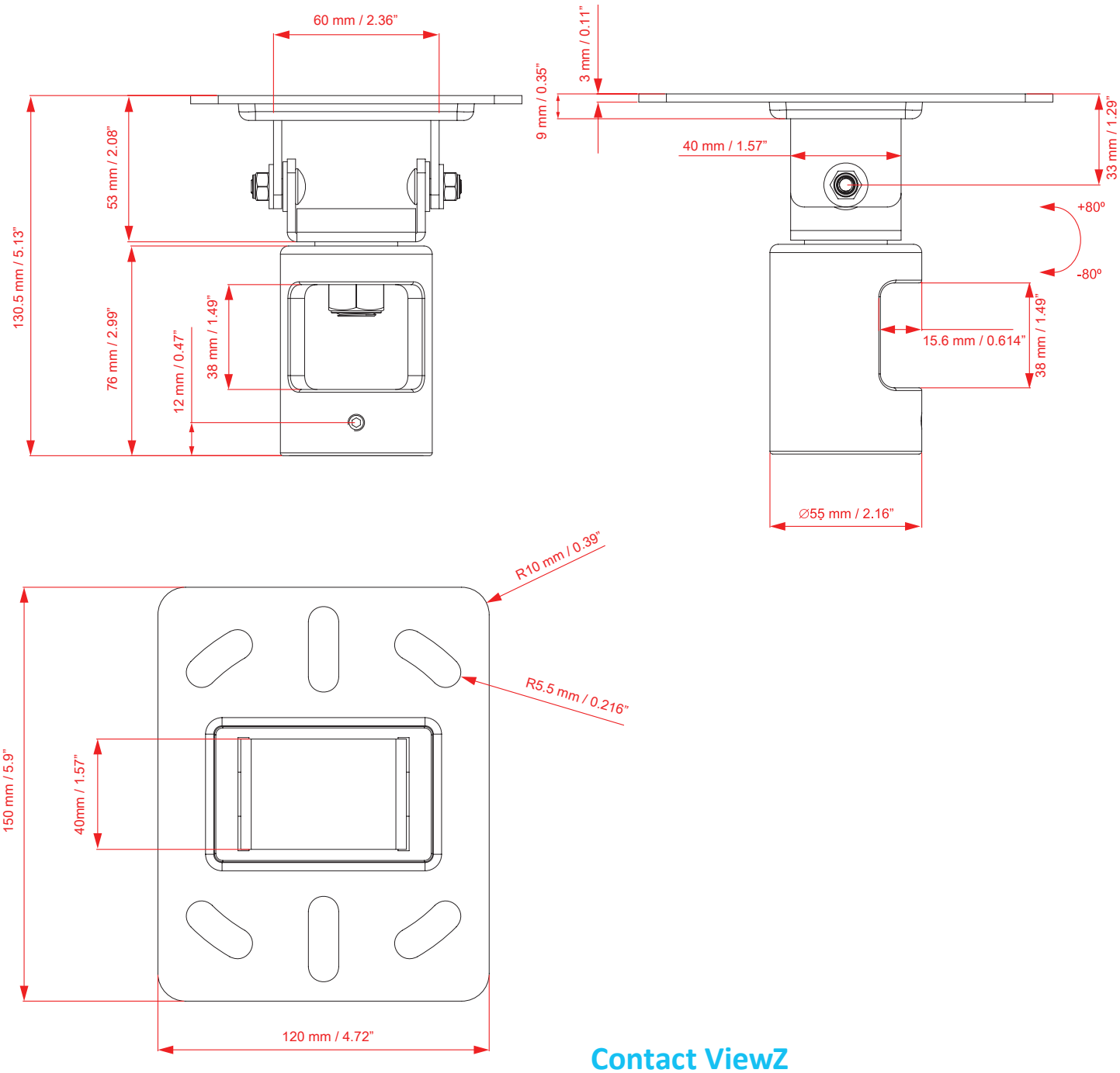

Contact ViewZ

- Address : 177 W. Orangethorpe Ave., Placentia, CA 92870
- Phone : (714) 996-1177, Fax : (714) 996-1138
- Sales : sales@viewzusa.com

* Design and specifications are subject to change without notice.

* 05112022-Rev. A

ViewZ®
www.viewzusa.com

VZ-CMKiT-01

VESA CEILING MOUNT KIT

DIMENSIONS

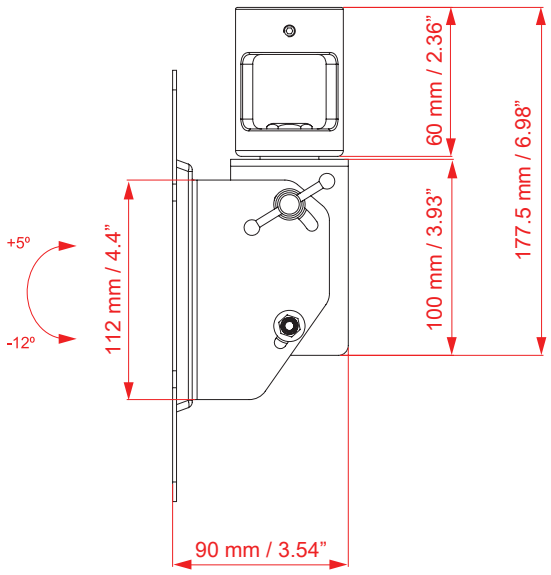

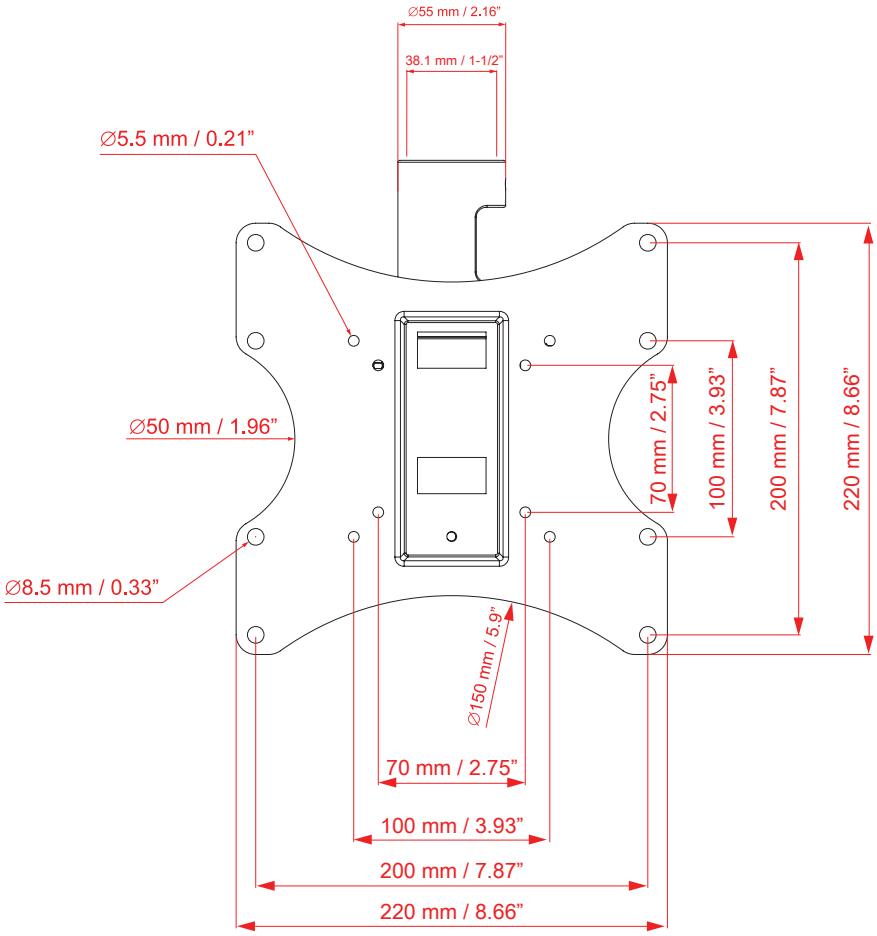

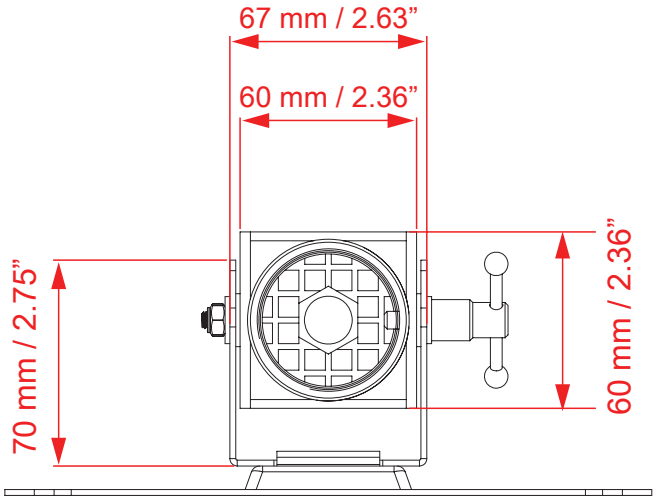

Contact ViewZ

- Address : 177 W. Orangethorpe Ave., Placentia, CA 92870
- Phone : (714) 996-1177, Fax : (714) 996-1138
- Sales : sales@viewzusa.com